Analysis of FRP side-door impact beam

S Eržen, Z Ren and **I Anžel**
Faculty of Mechanical Engineering, Maribor, Slovenia

ABSTRACT

The paper addresses the applicability importance of Fiber Reinforced Plastics (FRP) in automotive industry. Increased usage of FRP directly influences the car weight reduction and, consequently, gas emissions. An example is presented for the solution of reducing the total weight of a passenger car using a local design solution, which comprises a redesign of a side-door impact beam made of Twintex®.

The Finite Element Method (FEM) was used for computational analyses of behaviour of side-door impact beam under loading with aim to determine its capacity of impact energy absorption in relation to a standard steel impact beam. Different stacking sequences of composite beam were analysed with intention to find the most suitable solution in terms of strength, stiffness, absorbed energy and weight reduction.

Computational analyses have shown that appropriately stacked Twintex® impact beam has adequate load-carrying capacities and that it absorbs more strain energy as its steel equivalent. By following the criteria for maintaining the same stiffness, it is shown that employment of the Twintex® composite leads to an overall increase of the beam dimensions. Nonetheless, a 10 % weight reduction is achieved with respect to steel.

Keywords: Side-door impact beam, weight reduction, Twintex®, energy absorption

1 INTRODUCTION

Gas emission regulations of passenger cars are very important issues in the automotive industry. They directly impact the final vehicle design, process technology and, consequently, the fuel efficiency. In order to comply with the regulations, the automotive engineers have to: (1) redesign the interior by reducing empty vehicle space, (2) initiate technological changes

which eliminate the equipment or/and reduce the equipment's robustness, and (3) replace the existing materials with lighter ones without sacrificing structural integrity and safety.

Optimal design of vehicles and their stiffness play a vital role in the design of automotive structural applications, so it is not surprising that this issues are scrutinised in detail, especially when introducing the new lightweight materials (e.g. aluminium and polymer composites). In order for automotive engineers to change steel structural parts with parts made of lightweight materials, they must initially estimate and evaluate the optimal design of the structural part without sacrificing its safety and stiffness.

The following study presents the application of Fiber Reinforced Plastics (FRP), in particular Twintex® [1], for the side-door impact beam of the passenger car Renault Twingo, Fig 1. During the short time of a real crash, the existing steel side-door safety member is subjected to extensive loads and high deformation. Thus, its equivalent lightweight beam should be designed in such a manner, that it is able to absorb more strain energy, retain a satisfactory stiffness and strength, and has less weight. Decelerations and forces, exerted on the vehicle during a crash, must be distributed over the structure in such a way, that the passenger in the structural "safety cage" is directly affected as little as possible. In regard to this, directions 70/156/EEC [2] in 96/27/EC [3] of the European standard for vehicle safety ECE-R 95 should be taken into consideration when designing the side-door impact beam.

For the structural analysis of the side-door impact beam, the Finite Element Method (FEM) was used since it is the most widely used computational method in automotive design applications. Stiffness, stresses and strain energy were analysed by taking into account the material non-linearity behaviour and large deformations, since the response of the safety member is not directly proportional to the applied load.

2 REQUIREMENTS OF THE SAFETY STRUCTURAL BEAM

The function of the safety beam in automotive applications is to provide a high level of safety for the passenger in the case of side impact by another vehicle. The beam should have the ability to absorb as much deformational energy as possible without breaking.

The safety member is usually placed in the vehicle side doors, more precisely inside the door frame. The exact position of the member depends on the structural joints of the door and on the position of the car seat. Proper placement considerably contributes to the passenger safety.

Steel is still the most widely used material for such members. However, breakthroughs in the application of lighter materials, such as FRP, are being initiated in the automotive industry. Correct fibre orientation and stacking sequence of the cross-ply laminate contribute to higher energy absorption when compared to steel equivalent. Composites have very high strength- and stiffness-to-weight ratios in the fiber direction, as well as in the direction perpendicular to the fiber (Table 1) [4], even though their Youngs modulus is 15-times lower than that of the steel. This means that composite members will necessarily have an increased thickness of the load carrying areas (by chance hollow cross-section), and larger second moment of inertia to reduce the effect of elastic bending. The disadvantages of composites, in comparison to steel, are higher production and tooling costs, whereas processing of the complex parts in one piece is much easier.

Structural elements and definitions connected to side-door impact beam are:

- Connection (Fig. 2): a connection type (e.g. bolt joint, glue joint, riveted joint, welded joint and different combinations) influences how the member deforms and what percentage of energy absorption the beam achieves.
- Side wings (Fig. 3): represent additional strengthening of the beam, and consequently contribute to the increase of energy absorption.
- Strengthening region (Fig. 5a): represents additional reinforcement of the beam at the point of load application. The length depends on the available structural joints.

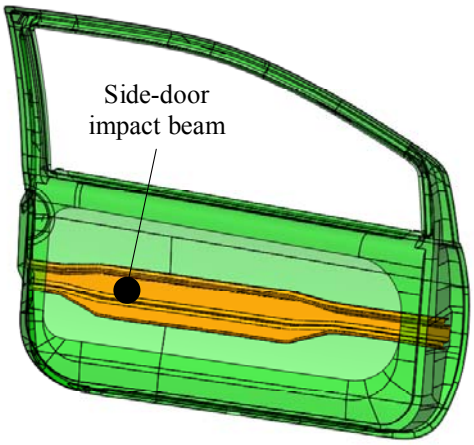

Fig. 1 Door-beam construction of Renault Twingo

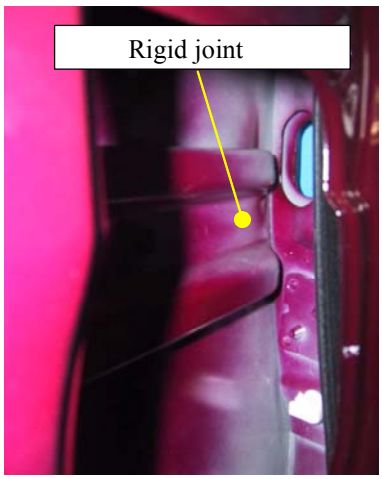

Fig. 2 Rigidly connected beam

The objective was to show the alternative of using FRP for side-door impact beam design. The application was chosen for the Renault Twingo side front door for which structural joints are known, Fig. 3. For proper design of the impact beam the available door space must be taken into account, namely 60 mm (B) for the depth of the door, 1250 mm (L) for the length and 170 mm (H_1-H) for the height (because of the speaker, upper edge of the door and isolation). Here the depth B refers to the distance from the outer panel up to the guide-rail for rising/lowering the window. The height of H = 160 mm must be taken into account to place the safety member in the correct position from the doorstep.

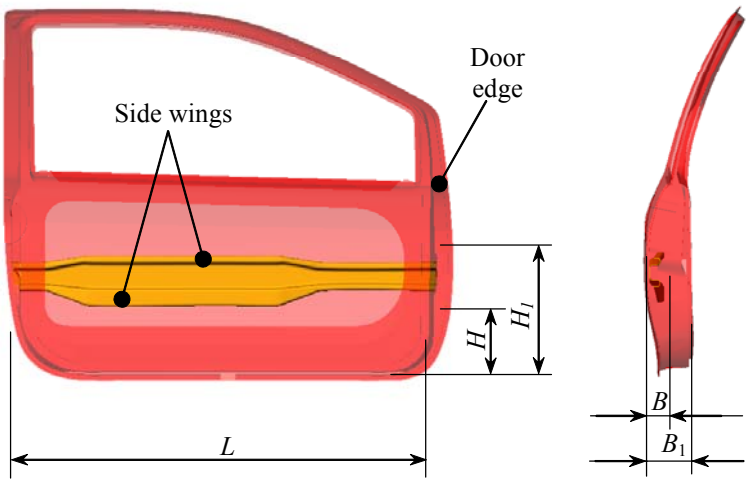

Fig. 3 Geometric restraints for Renault Twingo door model

3 STANDARD ECE-R 95

When designing the side-door impact beam, the regulations 70/156/EC and 96/27/EC of the European standard ECE-R 95 must be taken into consideration. The regulations call for a test, where a mobile deformable barrier impactor at 50 km/h (13.8 m/s) crashes into the car laterally at 90°. The speed must remain constant for the last 0.5 m before physical contact.

Several other parameters must be met in order for the test to be performed correctly, but they are out of the scope for designing the safety cross member (setting up the sensors, dummy position, etc.).

The deformable blocks, placed on the face of the mobile deformable barrier impactor, hit the door at the height of 350 mm from the ground level. This is the height when the crash consequences for the passenger are the greatest, i.e. hip injury. In order to increase the safety level of the passenger, the safety cross member should be placed on the correct height with regard to the doorstep.

Testing according to the ECE-R 95 standard is extremely expensive; therefore a simplified laboratory test procedure is often used instead [5]. Here the impact beam is loaded in the span centre with an impact hammer of mass 13 kg, dropped from a certain height (Fig. 4). Attention should be paid to the possible rupture of the impact beam.

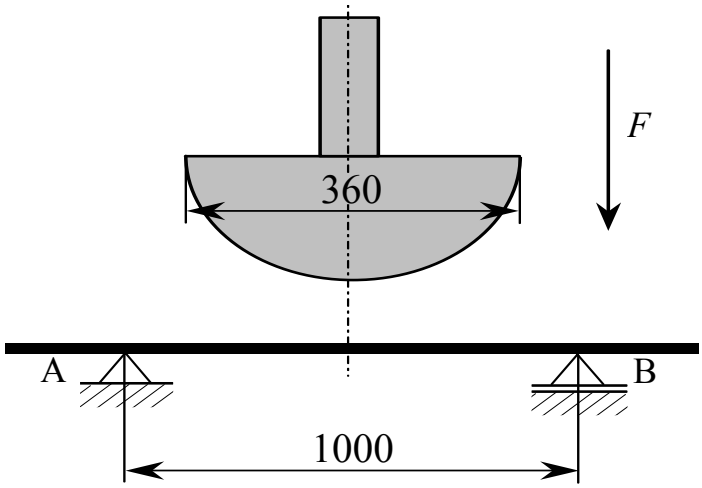

Fig. 4 Laboratory test of the impact beam

4 DESIGN OF THE SIDE-DOOR IMPACT BEAM

The existing design of the side-door impact beam in the door of the Renault Twingo is made of steel ISO 31CrNiMo8. The purpose is to achieve a higher percentage of energy absorption by adapting the existing steel design. The new length of the beam is 1200 mm. The strengthening region, where highest deflections and stresses are expected, is 540 mm long and was chosen regarding to the position of the applied load (Fig. 5b). The beam's cross-section is shaped like double *S*, it is 80 mm wide in the narrowest section and 135 mm in the widest section, Fig. 6. The thickness of the three-dimensional (3D) member is 1.3 mm and is constant throughout the whole structure, delivering a total mass of 2.36 kg.

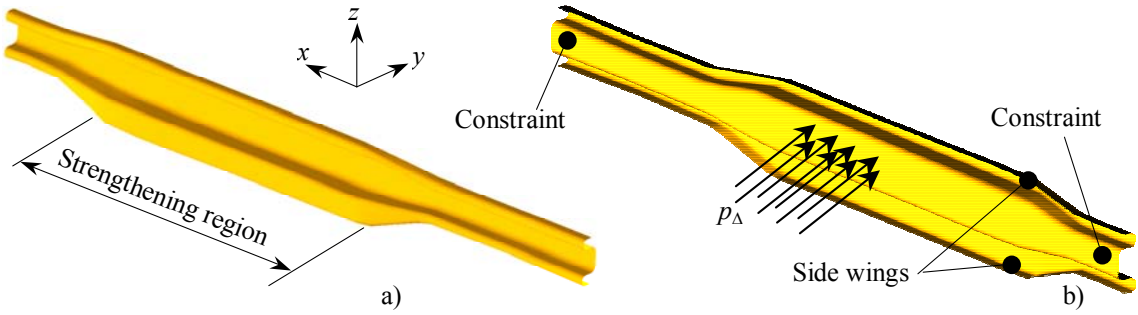

Fig. 5 Side-door impact beam with boundary conditions: (a) front side and (b) back side

Side wings (Fig. 5b) are curved and represent additional strengthening, which causes the deflections to decrease, while at the same time an increase in the percentage of the absorbed energy compared to the steel design. The largest proportion of the absorbed energy, taken upon by side wings, is in the plastic region of the material deformation. It is expected that the side wings will curve inward under the applied load. Smooth passage from one cross-section to the other ensures that high stress concentrations are avoided.

The beam is designed to be unsymmetrical, because of its placement in door according to the standard ECE-R 95. The end-beam connection holes were not taken into account. While the beam is welded to the door structure when using steel, it is glued in the case of a composite. Screwing the composite beam is out of consideration. In case of the Renault Twingo door, the beam is with its backside fastened to the door by welding.

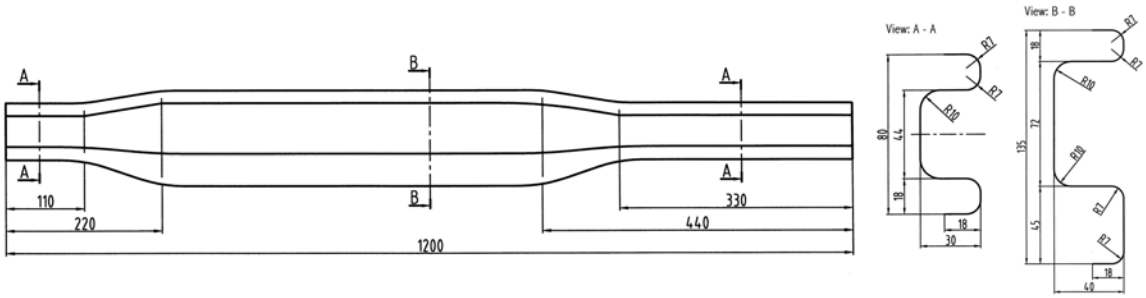

Fig. 6 Impact beam dimensions

With such a design consideration the beam was functionally evaluated. The following step was to compare the stiffness, strength, mass and energy absorption by means of computational analyses in the framework of the FEM.

5 COMPARATIVE ANALYSIS OF SIDE-DOOR IMPACT BEAM BY THE FEM

The mechanical and physical properties were first determined for steel and Twintex® composite. While steel is an isotropic material and it requires only the modulus of elasticity E and the Poisson's ratio ν, the Twintex® structure is orthotropic. To simplify the analysis, a special class of orthotropic material was used, the so-called transverse isotropic. It has the same properties in one plane (e.g. the x-y plane) and different properties in the direction normal to this plane (e.g. the z-axis). Behaviour of this material can be described by five independent elastic constants. The characteristic stress-strain curves for both materials are shown in Fig. 7. The steel possesses a non-linear behaviour and Twintex® a linear one. All material data is given in Table 1.

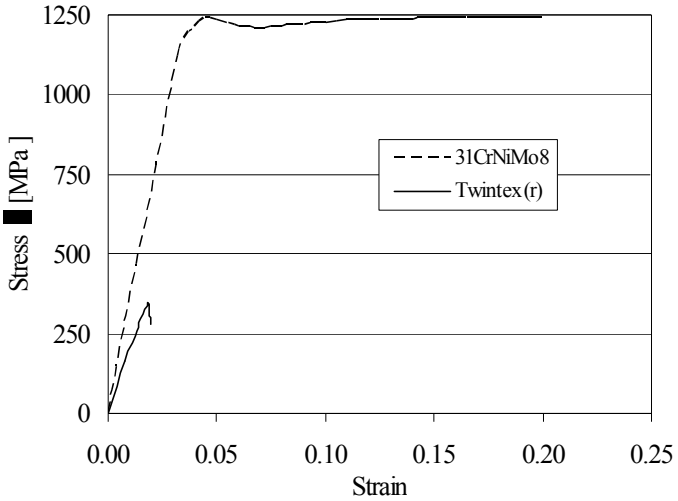

Fig. 7 Stress-strain relationship for steel and composite Twintex®

In order to minimize the weight of the whole structure, the thickness of the safety member was chosen to vary. The attention was paid also to the percentage of absorbed strain energy, stiffness and stresses, which also changed during each step in the procedure of varying the thickness and, consequently, the stacking sequence and fiber orientation.

Table 1 Mechanical and physical properties of materials used in the analysis

Material	Density	Youngs modulus	Poisson's ratio	Yield strength	Plasticity modulus	Tensile strength	Shear modulus	Min. tech.
	[g/cm^3]	[GPa]	/	[MPa]	[MPa]	[MPa]	[GPa]	[mm]
Steel 31CrNiMo8	7.833	206	0.29	1160	667	1240	79	0.6
Composite Twintex®* TPEAT4460K	1.5	13.79/12.97	0.10/0.12	-	-	350	1.72/1.59	0.1

* Shear strength of the glue is 35 N/mm^2 [6].

The computational model of the safety member was built by using quad shell elements. Triangular shell elements were used in places where quads could not be connected. The element size of 7 mm was prescribed around the constraint area, the load area and around the areas with smooth passages from one cross-section to the other. The rest was modelled using the 10 mm sized elements.

When setting the boundary conditions, the regulations 70/156/ECC and the real door structure dimensions were taken into account. The load was equal to F = 40 kN. The contact problem [7] was not included in the analysis, because the solution did not converge. For this reason the load was distributed evenly as a pressure on the surface, which represents a possible contact between the beam and the hammer (Fig. 5b). The distribution represents the worse scenario of loading, thus being triangularly graded.

Two types of side-door impact beam constraint were analysed. Welding is the most common solution for assembling such structures and was simulated as a rigid constraint on both ends of the beam (Fig. 8a). The second type was a spring constraint, where the effect of the door deformation, together with the beam was taken into account. This was simulated using

one-dimensional bar elements on the edges of the constrained area (Fig. 8b). These elements transfer only axial loads and behave similar as spring elements.

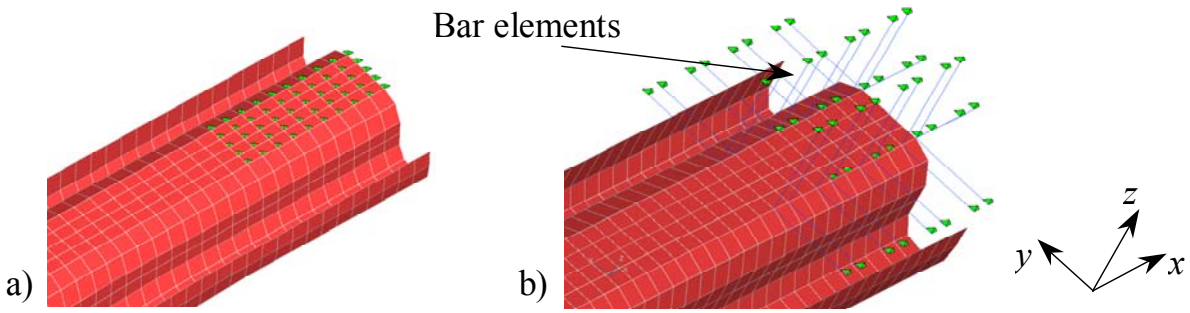

Fig. 8 Beam constraints: (a) rigid and (b) spring

The geometric modelling was done with the commercial program package *I-Deas* [8], whereas the FEM computational analysis with *MSC.visualNastran for Windows* [9]. The used non-linear static type of the analysis considers geometrical and material non-linearity (in case of steel, while for composites it remains linear). When defining the non-linear elasto-plastic material behaviour, the bilinear approximation was taken into account.

The effect of large deformations and large rotations was taken into account in the definition of geometrical non-linearity. This was performed because the initial design with thin wall thickness of the beam significantly changed the shape after deformation.

The incremental-iterative computational simulation analysis was necessary due to material and geometric non-linearity, thus to obtain a convergent solution a certain number of iterations and load increments have to be performed. By computational experimentation it was found that the load has to be divided into 5 - 30 increments and subdivided in 25 - 120 iterations. The convergence load tolerance value was set to 0.001. The SEMI method [10], which forces a stiffness matrix update only at the first iteration of a load increment, was used in the analysis. It is effective in many highly non-linear problems where regular stiffness matrix updates help the solution to converge.

Although the analyses times ranged from 15 min to 2 hours for the steel beam of 1.3 mm wall thickness, it was found that thinner wall thicknesses required more time for the solution to converge. Owing to the lower structural stability, the yielding point was exceeded earlier in such structures, which resulted in prolonged times in the non-linear region and longer analysis times for the complete analysis.

Analyses were performed for the given beam design made out of steel and Twintex® composite. In order to have a diverse spectrum of user-end possibilities, each of the solutions was simulated using two types of constraints: the rigid constraint with all degrees of freedom (DOFs) fixed; and the spring constraint, simulating the door's hand-over deformation type. Using numerical calculations, the objective was to find out appropriate wall thickness of the composite side-door beam, so that the weight of the structure would be minimized and the energy absorption maximized, without beam breakage.

6 SIMULATION RESULTS

When analysing the steel beam, it is usually sufficient to present the results for one set only (e.g. stresses, strains, strain energy density, etc.). However, for composite materials one needs to deal with several sets of results corresponding to each ply, which together describe the complete stress and strain state of the composite. That includes normal and shear stresses in the direction of the fiber, perpendicular to the fiber and transverse to each ply.

The basic design requirement for the composite beam was to avoid complete rupture. In the laminate design, rupture of any of the lamina or their delamination generally leads to failure of the whole laminate structure. To predict the rupture of the first lamina, the stress state in each lamina was analysed by applying the Maximum Stress Failure Criterion (MSFC). This criterion indicates the occurrence of the rupture, and does not say anything about the nature of the rupture itself. This effect is taken into account by determining the delamination indices. Checking indices for all plies is time-consuming, particularly when the number of plies increases. Thereby, the method of maximum probable stress was used for the evaluation [11], i.e. the von Misses criterion. This is acceptable for steel as an isotropic material, where the resultant stress is compared to the uniaxial strength of the material. Laminates are highly anisotropic, thus here the resultant strength cannot be analytically calculated, and the von Misses criterion is only used as a tool to transform a 3D (multi-axial) stress state into uniaxial.

The reference solution was the steel side-door impact beam with a 1.3 mm thick wall, whose displacements and stresses are schematically shown in Fig. 9a. To retain the same level of stiffness as that of the steel beam, the thickness of the composite beam was estimated to be equal to 4.2 mm. The composite beam mass is thus equal to 1.45 kg, which is 38.5 % weight reduction compared to the steel beam (Table 2). The initial stacking sequence of the Twintex® cross-ply symmetrical laminate consisted of 14 plies with the following fiber angles $[0°/\pm80°/\pm60°/30°/0°]_S$. In this case, the maximum von Misses stress in ply 1 exceeded the allowable 350 MPa. The normal stress in the direction perpendicular to the reference fiber orientation of the laminate, according to MSFC, and all delamination indices, were also exceeded. The initial thickness was then increased to 5.6 mm, with the new laminate stacking sequence of 28 plies laminate $[\pm45_2/\pm80/0_2/\pm30/\pm80/\pm45]_S$. The new laminate design proved to be adequate since none of the stresses nor the delamination indices were exceeded. By this stacking sequence the beam is capable to absorb 91.3 % (Table 2) more energy than the steel beam. Aiming to find the optimal solution with better results, the thickness was increased to 6 mm (Fig. 9b), which yielded a 14 plies laminate design with the optimal stacking sequence of $[0/\pm45/\pm60/30]_S$ and weight reduction of 11.8 %. Now, the energy absorption capability compared to the steel was increased from the initial 1164 J to 2864 J (Fig. 10), which is a 146% increase (Table 2). Stresses in all directions and indices also satisfied the set conditions.

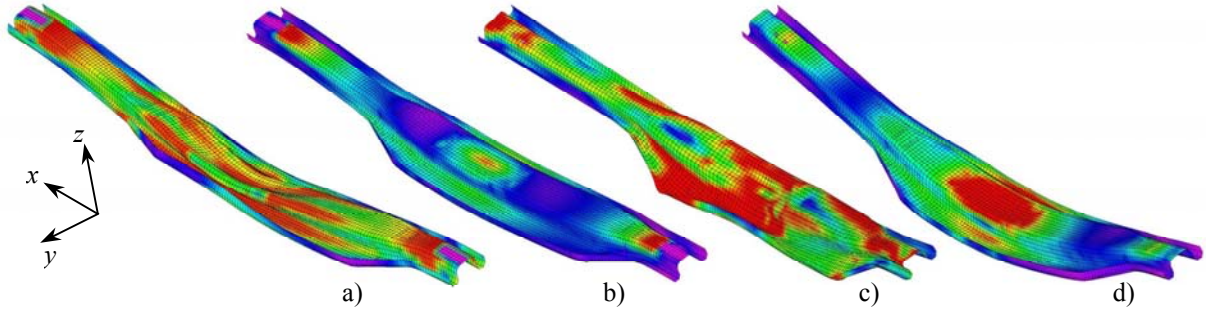

Fig. 9 Maximal displacements and stress distributions for rigidly constrained beam: (a) steel; (b) composite, and spring constrained beam: (c) steel; (d) composite.

Similar to the rigid constrained beam, the results for spring constrained beam show better performance as compared to the steel structure. In this case displacements have increased by more than twice. But if the structure were observed locally (not taking into account the door deflection), the calculated deflection values would have been much lower than by the rigid constraint beam. The reason for almost equal value of energy absorption capability, which is 145.3 % (Table 2), can be attributed to the part of the energy being absorbed by the door itself.

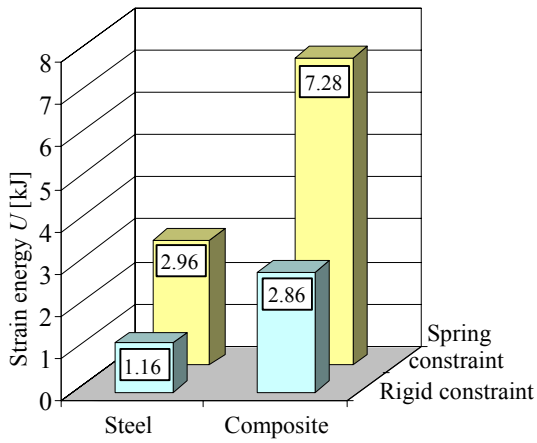

Fig. 10 Strain energy

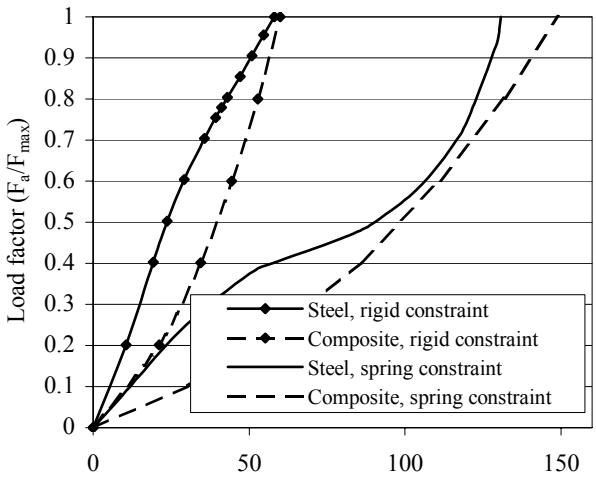

Fig. 11 Load-axial displacement d_z curves

From Fig. 11 one can see that the rigidly constrained composite beam possesses the concave curve from the start point, which explains that during the initial stage of deformation there is gradual transfer of impact on the structure compared to the steel beam, where the curve is convex. When observing the spring constraint curves, the situation is slightly different during the middle stage of the deformation, but it can be generally compared to the rigid type of constraint.

One can say that geometrical changes on the structure, e.g. changes of the wall thickness, can drastically increase the energy absorption capability of the side-door impact beam. This directly influences the effect of weight reduction, which complies with the main idea of the problem, and it can be done until a certain minimal stiffness by which the beam does not ruptures. In order to find out more about the rupture itself, it is recommendable to look also for stresses and deflections at the same time.

Table2: Comparison of simulation results

	Material	Thickness t [mm]	Mass m [kg]	Δm [%]	Displa-cement d [mm]	Stress σ [MPa]	Strain energy U [J]	ΔU [%]
Rigid constraint	*Steel* 31CrNiMo8	1.3	2.36	-	84.3	1223	1164	-
	Composite Twintex®	4.2	1.45	-38.5*	76.3	398, lam 1**	4331	+272.1
		5.6	1.90	-19.5	52.8	345, lam 5	2227	+91.3
		6.0	2.08	-11.8	59.0	330, lam 1	2864	+146.0
Spring constraint	*Steel* 31CrNiMo8	1.3			181,0	1220	2967	-
	Composite Twintex®	4.2			-	-	-	-
		5.6			-	-	-	-
		6.0			149.4	250, lam 1	7279	+145.3

* +/- Means relative increase or decrease of the property in comparison with the same property of steel beam; ** ply number where maximum stress appears; area of all elements is A = 231660mm^2.

7 CONCLUSIONS

The paper investigates the feasibility of using the composite material for side-door impact beam of a passenger car by means of computational simulation of its behaviour under test load. The design requirement calls for the composite impact beam to retain at least the same stiffness as the original steel beam, while it is highly desirable that its weight is reduced and at the same time its energy absorption capacity is increased.

From the comparison of computational results it can be concluded that using the composite Twintex® instead of steel for side-door impact beam, the response characteristics of the beam are considerably improved, and the safety level of passengers greatly increased.

It can be concluded that when seeking for higher strength and stiffness of the structure, minimal weight and maximal energy absorption, the use of composite materials has a clear advantage over traditional steel structures. However, the high manufacturing and material costs of composite structural members prevent their widespread application in large series car production and necessitate their use only for small series of high-performance cars.

The future prediction is based on the statement that composite employment will significantly increase in the automotive series production when significant cost reduction could be achieved, especially in simplifying the complex process capabilities. Undoubtedly, this will be the future driving force in this area of research.

ACKNOWLEDGMENT

Financial support by the Slovenian Ministry of Education, Science and Sport through Young Researchers program is gratefully acknowledged.

REFERENCES

[1] Saint-Gobain Vetrotex International (2001). Twintex. [Online] available: http://www.twintex.com [April 6th, 2002].

[2] European parliament and the council, EU directive 70/156/EEC, *Official Journal of the European Communities*, May, 1996.

[3] European parliament and the council, EU directive 96/27/EC, *Official Journal of the European Communities*, 1970.

[4] Bricout, A. (2001). Composites Materials: Performance of Twintex® for Automotive Weight Saving. [Online] available: http://www.twintex.com/pdf/autoweight.pdf [November 27th, 2001].

[5] Cheon, S. S., Lee, D. G., Jeong, K. S., Composite Side-door Impact Beams for Passenger Cars, *Composite structures*, vol. 38., no. 1-4, 1997, pp. 229 - 239.

[6] Ren, Z., Glodež, S., Machine elements – vol. 1, *University of Maribor,* Maribor, 1. edt., 2001. (in Slovenian)

[7] Becker, A. A., Contact Mechanics and Stresses - Review of Finite Element Theory (Lecture 4), *University of Nottingham, Department of Mechanical Engineering*, April, 1997.

[8] EDS PLM Solutions, I-DEAS Master Series™, v.7, *Structural Dynamics Research Corporation*, USA.
[9] MSC.Software, MSC.visualNastran for Windows, version 2001, *The MacNeal-Schwendler Corporation*, USA.
[10] MSC.Software, MSC/Nastran for Windows User's Guide, *The MacNeal-Schwendler Corporation,* 1999.
[11] Hyer, M. W., Stress Analysis of Fiber-Reinforced Composite Materials, *McGraw-Hill*, 1998.

NOTATION

A	[mm^2]	Area of meshed elements used in calculation
B	[mm]	Beam's width limit
B_1	[mm]	Door width
d_z	[mm]	Axial displacement of the beam
E	[N/mm^2]	Young's modulus
F	[N]	Applied load
L	[mm]	Beam's length limit
H	[mm]	Upper height limit of the beam placement
H	[mm]	Lower height limit of the beam placement
U	[J, kJ]	Strain energy
m	[kg]	Mass
t	[mm]	Thickness of the beam
Δm	[%]	Relative change in mass
ΔU	[%]	Relative change in strain energy
ν		Poisson's ratio
σ	[N/mm^2]	Stress